ASSEMBLY INSTRUCTION

Sofa CHERRY

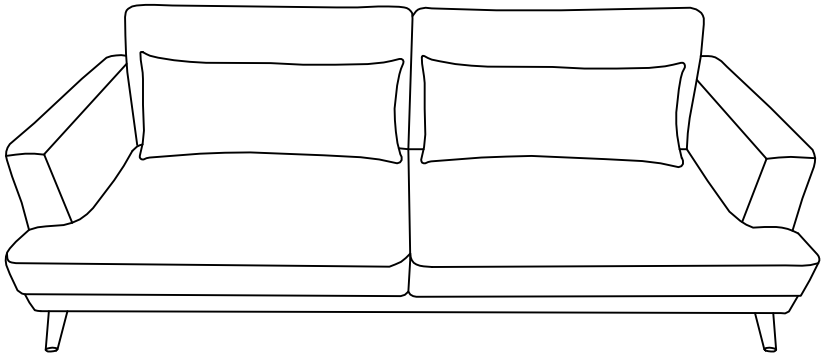

PARTS AND HARDWARE

Note: Individual parts are not shown to scale.

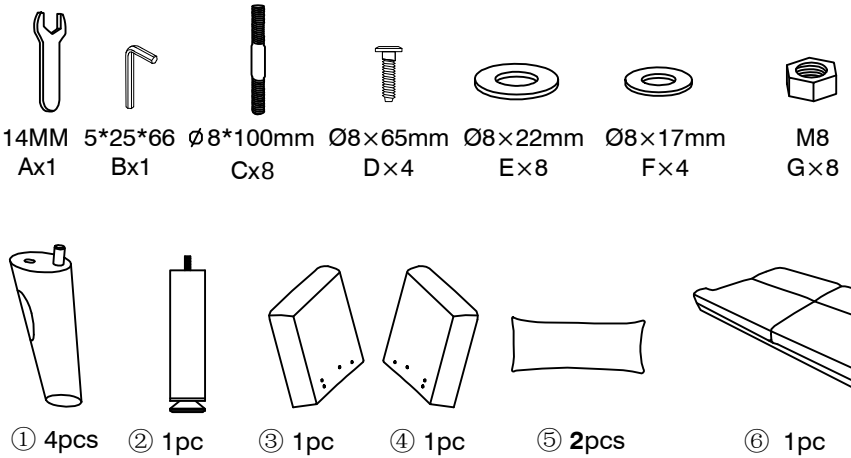

ASSEMBLY INSTRUCTIONS

Step 1

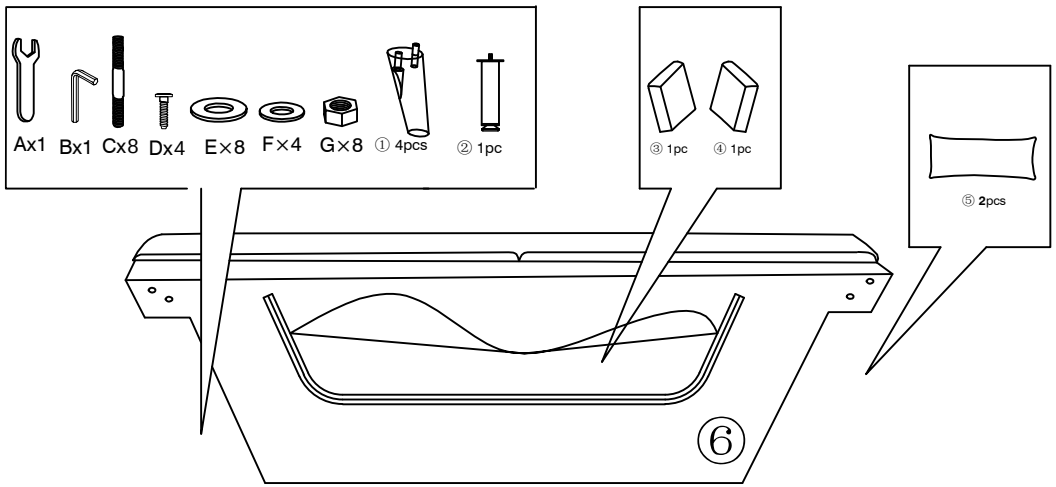

Step 2

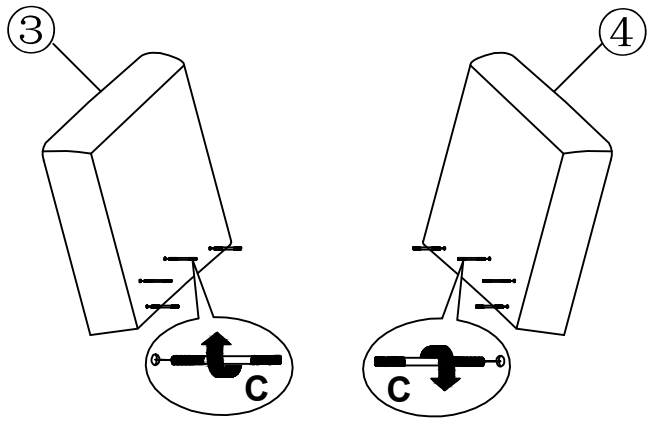

OPERATING YOUR UNIT

Step 3

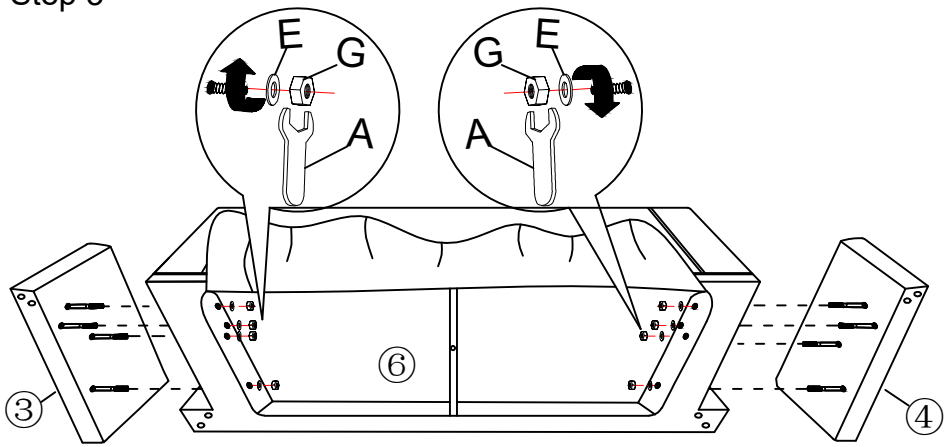

Step 4

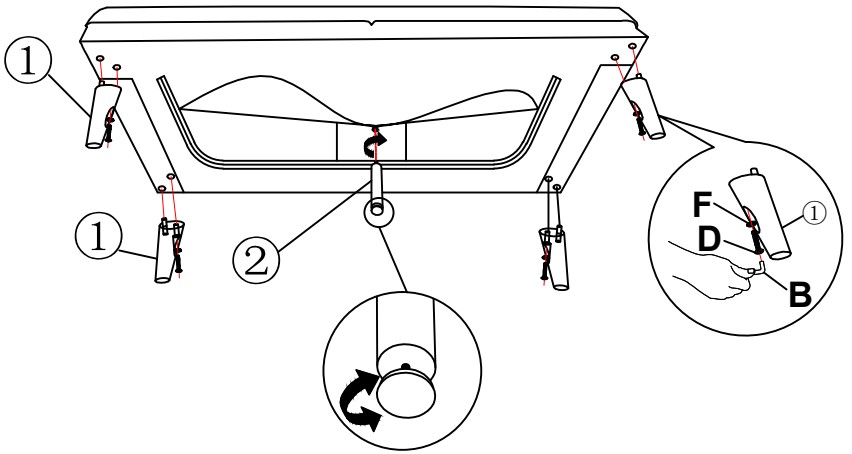

Step 5

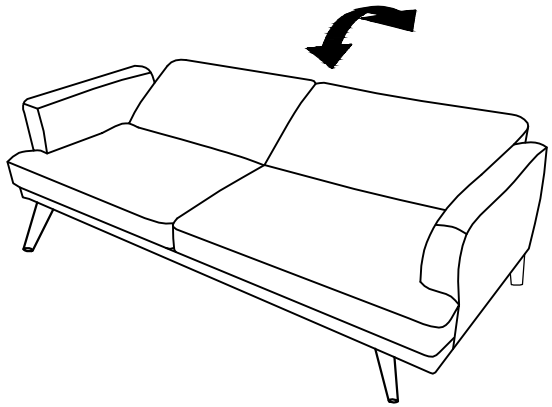

Step 6

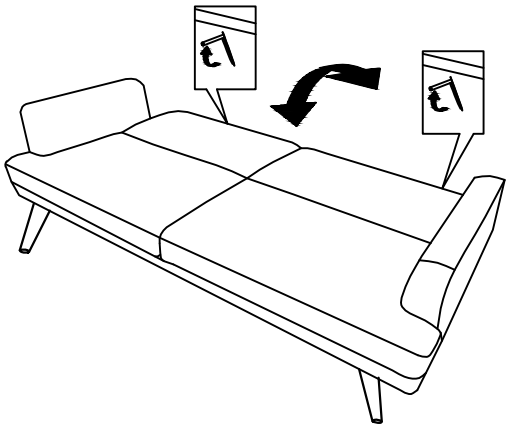

Step 7

